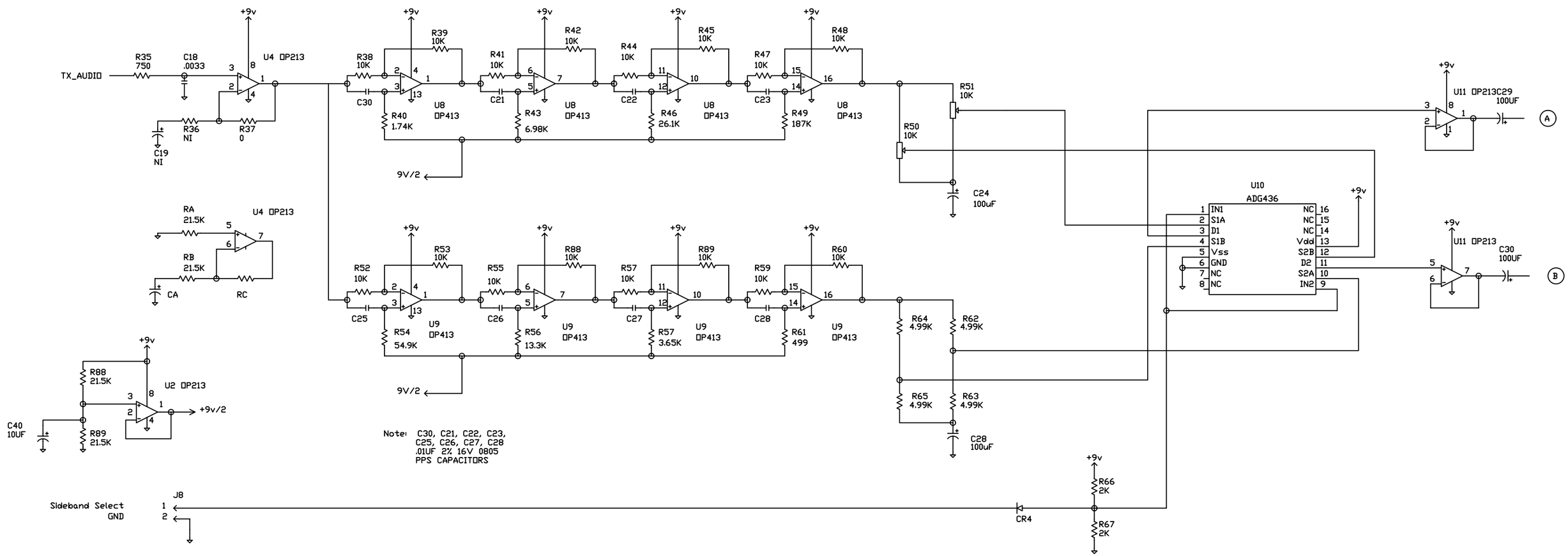
TX_AUDIO
R35
750
C18
.0033
U4 OP213
R36
NI
R37
0
C19
NI
+9v
R38
10K
R39
10K
C30
R40
1.74K
U8
OP413
9V/2
R41
10K
R42
10K
C21
R43
6.98K
R44
10K
R45
10K
C22
R46
26.1K
R47
10K
R48
10K
C23
R49
187K
R51
10K
R50
10K
C24
100uF
U11 OP213C29
100UF
A
U10
ADG436
IN1
S1A
D1
S1B
Vss
GND
NC
NC
NC
NC
NC
NC
Vdd
S2B
D2
S2A
IN2
U11 OP213
C30
100UF
B
RA
21.5K
U4 OP213
RB
21.5K
CA
RC
R52
10K
R53
10K
C25
R54
54.9K
U9
OP413
R55
10K
R88
10K
C26
R56
13.3K
R57
10K
R89
10K
C27
R57
3.65K
R59
10K
R60
10K
C28
R61
499
R64
4.99K
R62
4.99K
R65
4.99K
R63
4.99K
C28
100uF
R88
21.5K
U2 OP213
+9v/2
C40
10UF
R89
21.5K
Note: C30, C21, C22, C23,
C25, C26, C27, C28
.01UF 2% 16V 0805
PPS CAPACITORS
Sideband Select
GND
J8
CR4
R66
2K
R67
2K